Paulmann

Safety Instructions

1, 2, 3, 4, 5, 6, 8, 12, 16, 17, 18,19, 20, 22, 24, 29, 30, 31, 32, 33, 34

Info

www.paulmann.com

Paulmann Licht GmbH
Quezinger Feld 2
31832 Springe
Germany

www.paulmann.com

Art.-Nr.: **955.18**
955.19

(+MA326) PH06/18

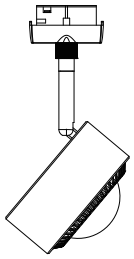
1x

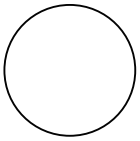
1x

incl.

A

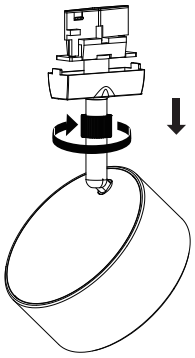

B

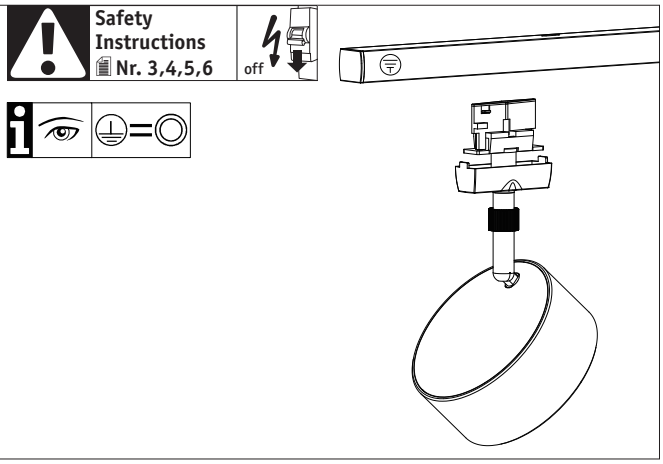

C

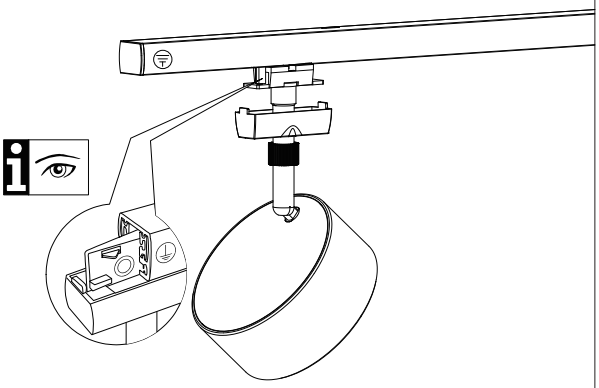

D

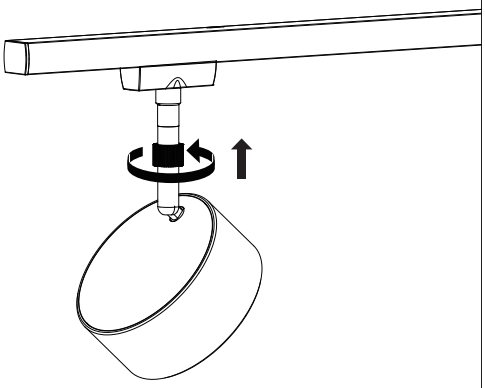
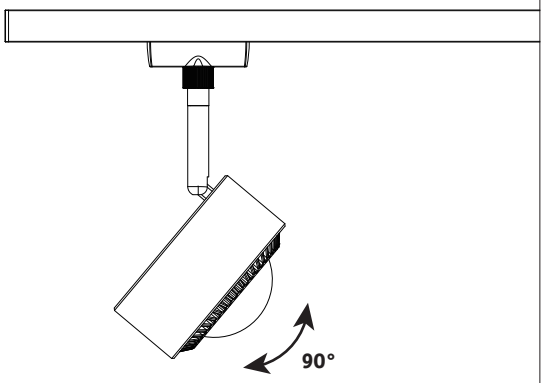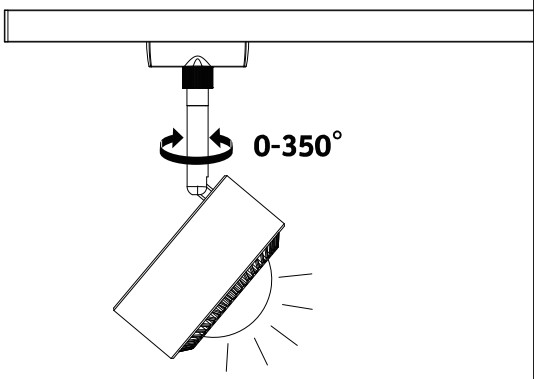
E